# E16FDDI Single-mode Single-core Back Mount Receptacle(Bayonet)

## 尺寸图

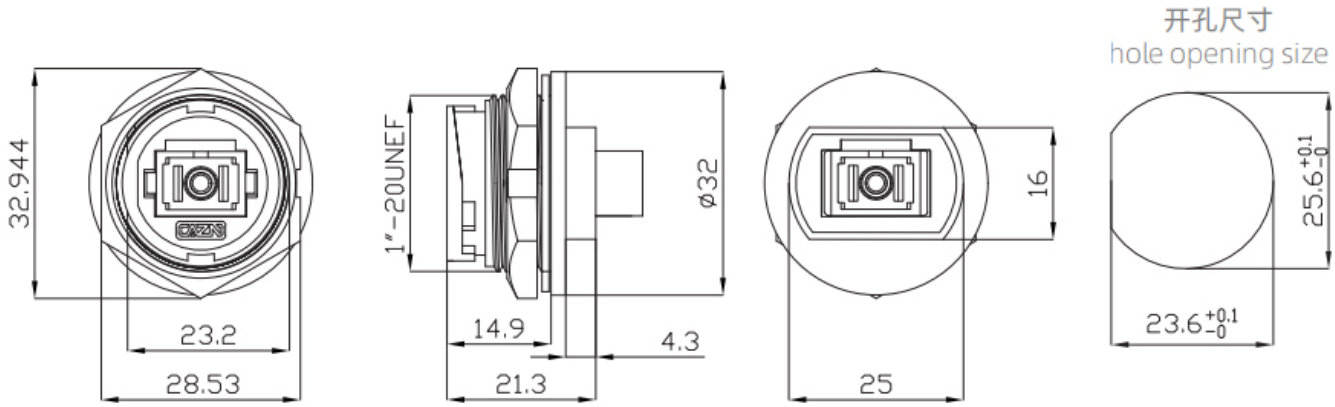




STA思大-元器件专业提供商!