MICRO USB Female Back Mount Receptacle with wire(Threaded)

尺寸图

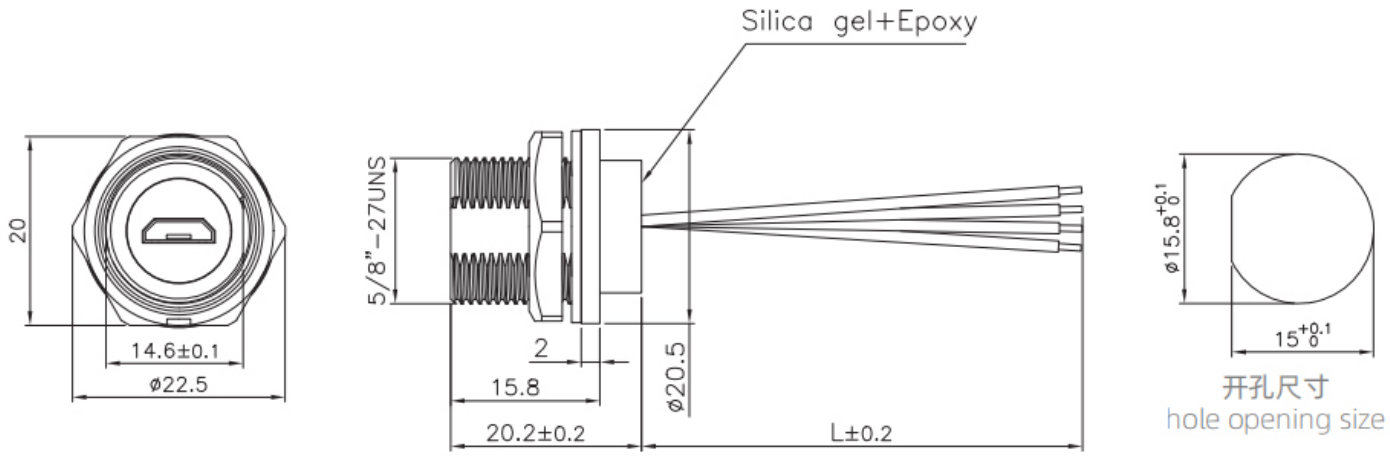

STA思大-元器件专业提供商!