MICRO USB Female to Female Back Mount Receptacle(Threaded)

尺寸图

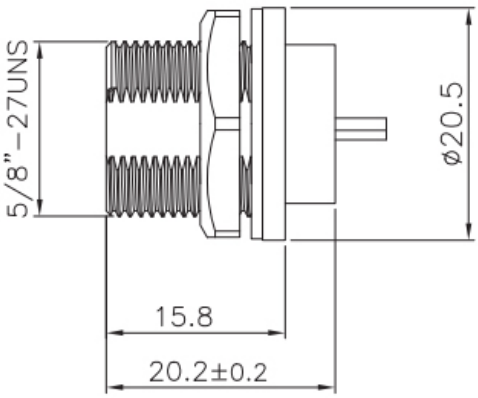

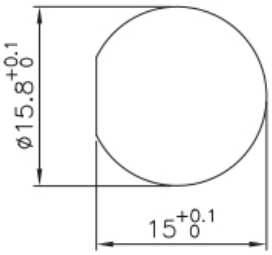

开孔尺寸
hole opening size

STA思大-元器件专业提供商!