尺寸图

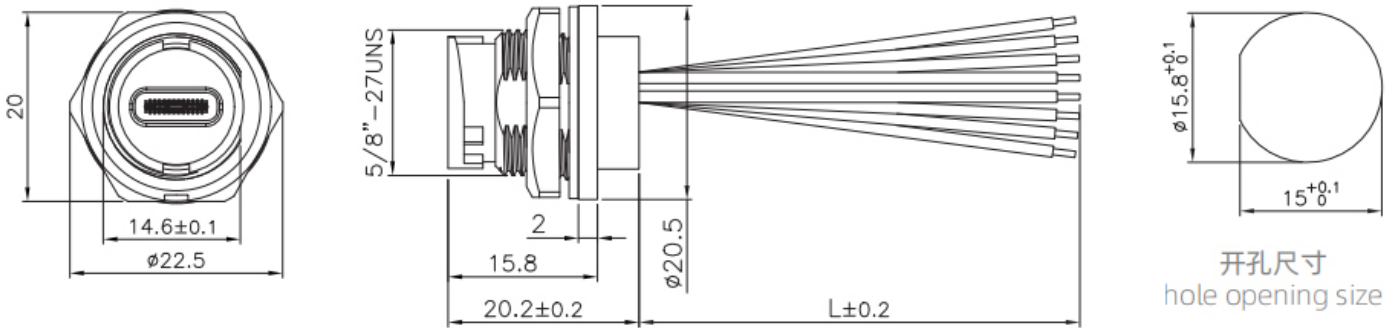
20
14.6±0.1
ø22.5
5/8"-27UNS
2
15.8
20.2±0.2
ø20.5
L±0.2
ø15.8+0.1 0
15+0.1 0
开孔尺寸
hole opening size