USB Female Receptacle to Male Overmolded with Cable (Threaded)

尺寸图

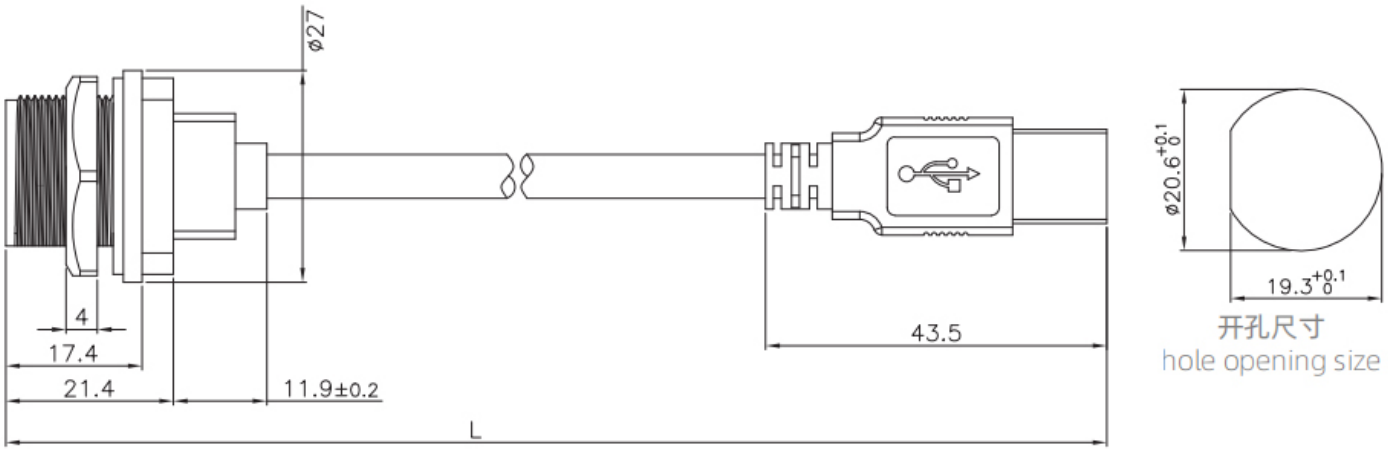

STA思大-元器件专业提供商!