E16RJ45 Female to Female(180°) Back Mount Receptacle(Bayonet)

尺寸图

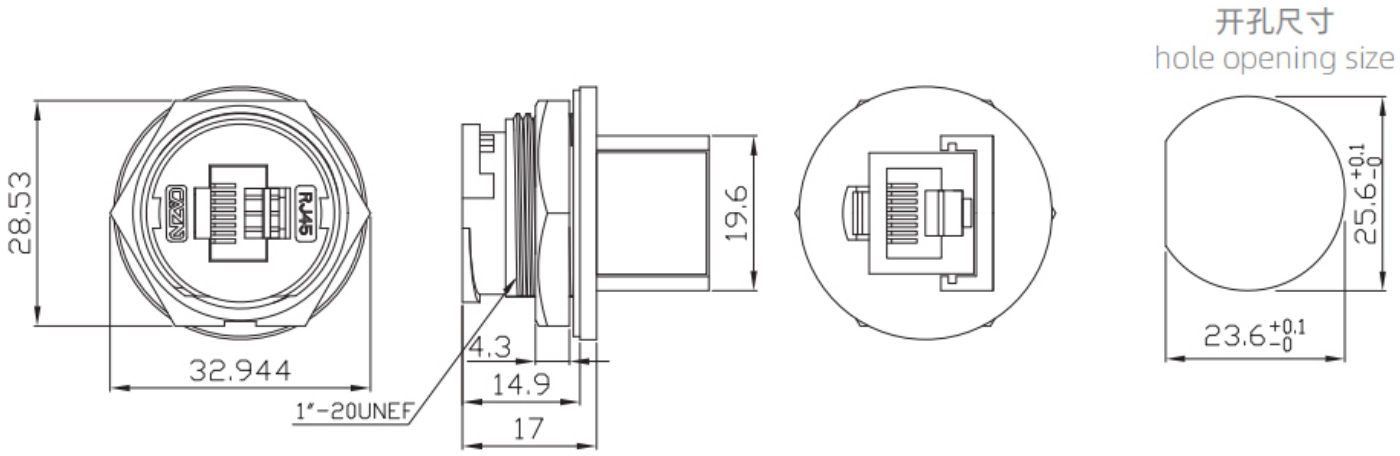

STA思大-元器件专业提供商!