RJ45 Female to Female(90°) Back Mount Receptacle(Threaded)

尺寸图

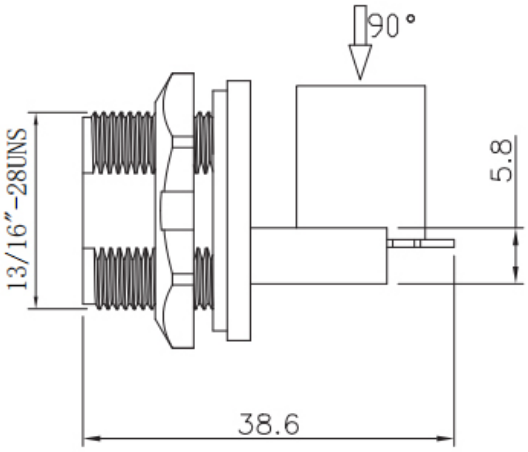

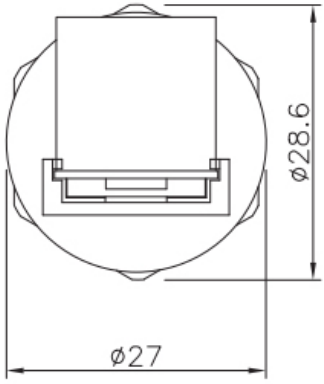

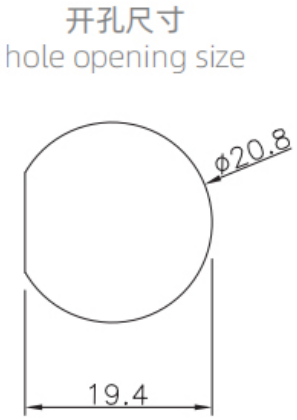

STA思大-元器件专业提供商!