E10-TYPE-C female back mount angled PCB receptacle (Threaded)

尺寸图

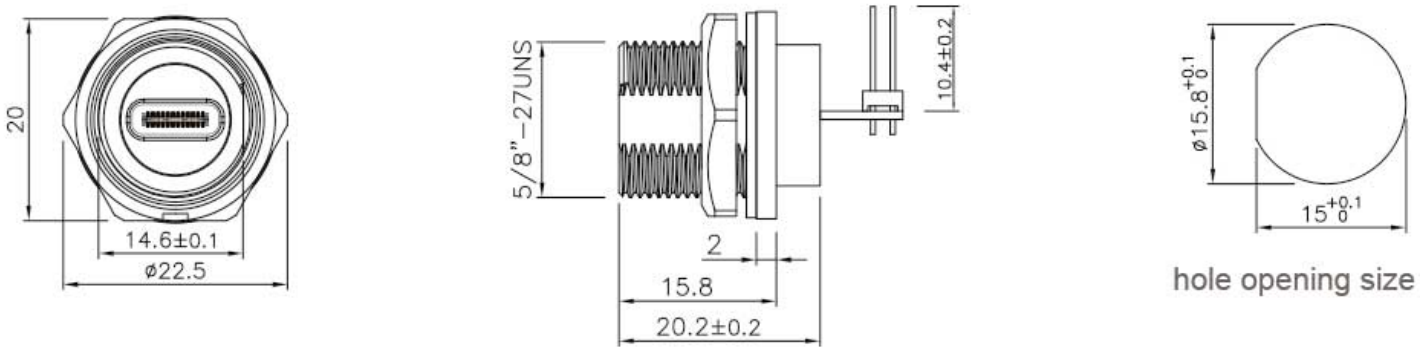

STA思大-元器件专业提供商!