EP-RJ45 Panel front installation female socket/Male straight plug with wire(Threaded)

尺寸图

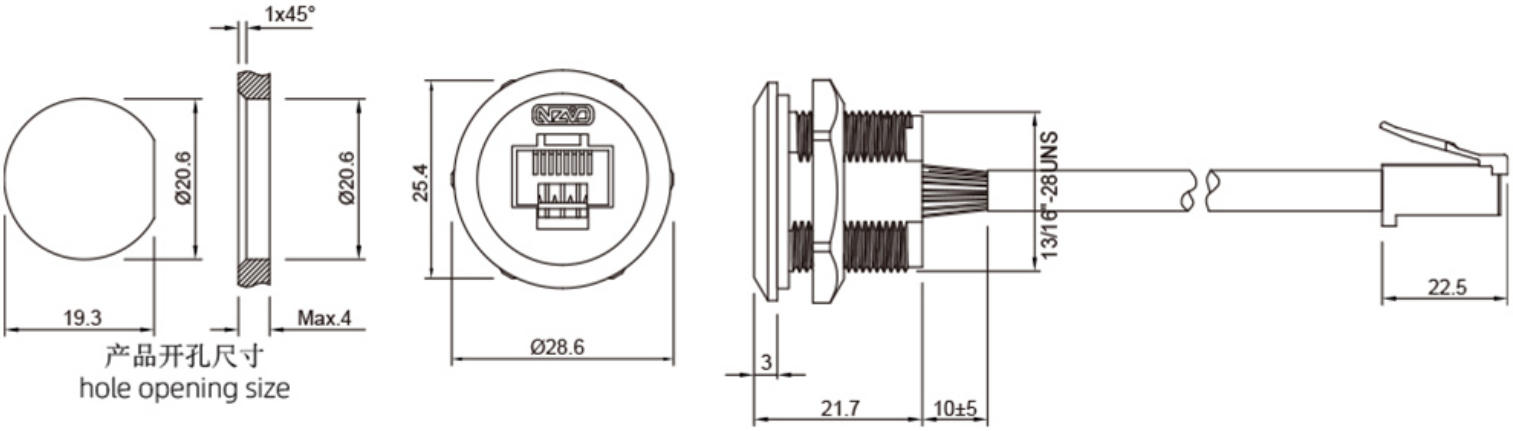

STA思大-元器件专业提供商!