EP-TYPE-C Panel front installation female socket/USB male plug(Threaded)

尺寸图

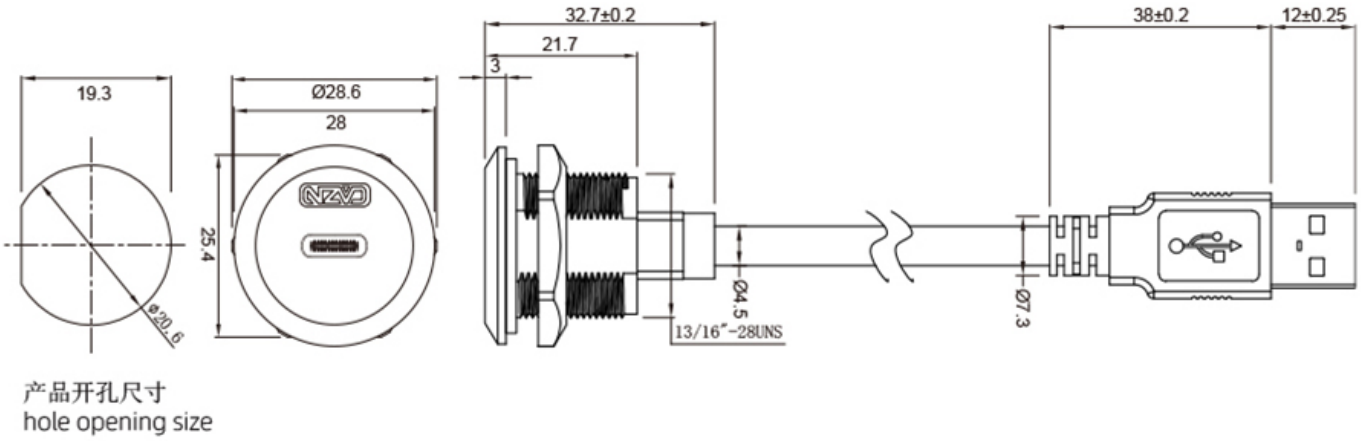

产品开孔尺寸
hole opening size